REV	DESCRIPTION	DATE	BY

Rohs Compliance

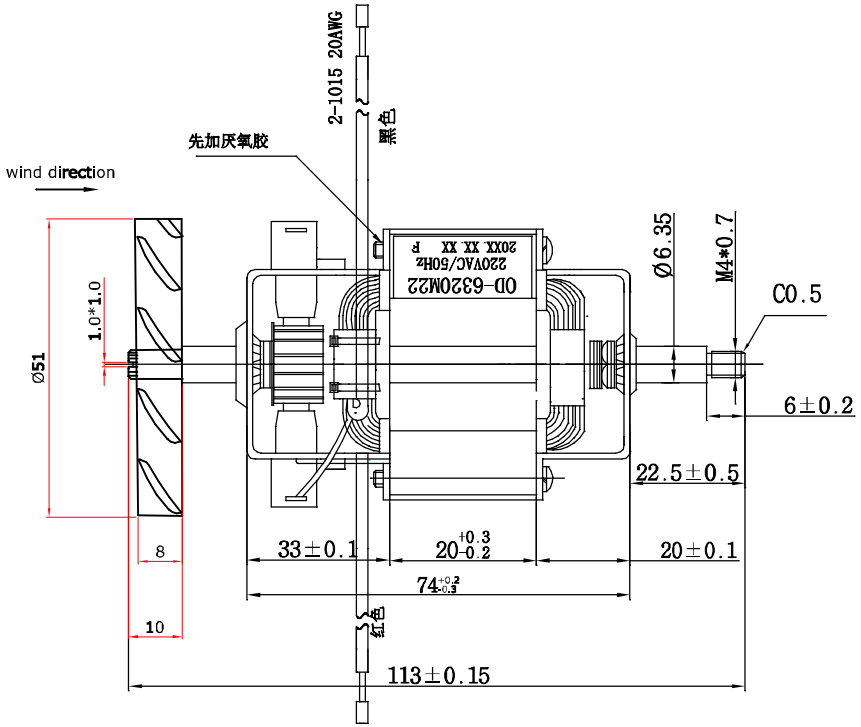

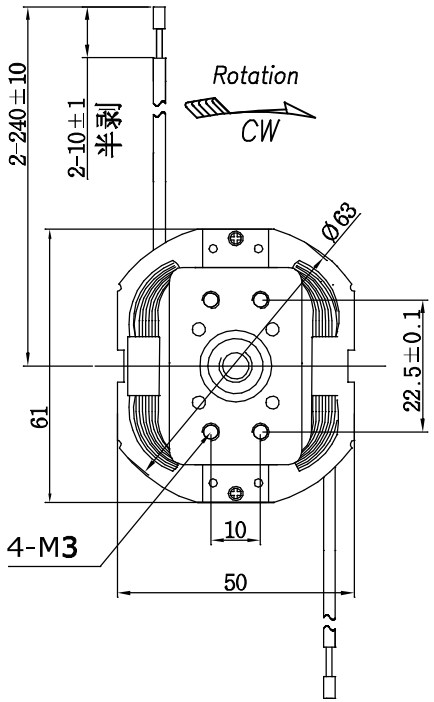

Notes:
1.Voltage with Frequency(电压和频率):220V/50Hz
2.Rotation(转向):CW
3.No-load Performance(空载性能)
No-load Speed(空载转速): 18000±15%RPM
No-load Current（空载电流）: 0.6=±15%A
No-load Power（空载功率）:130±15%W
load Speed(负载转速): 10000±10%RPM
load Power（负载功率）:300±15%W
4.Temperture Rise(温升): 115°
5.Insulation Grade（绝缘等级）: classF
6.Withstand Voltage（耐压）:
1500V/0.5ma/1sec

GENERAL TOLERANCES ISO 2768-m

Permissible deviations for linear dimensions

	Permissible deviations for basic size range							
	>0.5 ...3	>3 ...6	>6 ...30	>30 ...120	>120 ...400	>400 ...1000	>1000 ...2000	>2000 ...4000
m	±0.1	±0.1	±0.2	±0.3	±0.5	±0.8	±1.2	±2

Permissible deviations for angular dimensions					Permissible deviations for broken edges (external radii chamfer heights)		
	Permissible deviations for ranges of lengths in millimeters of the shorter side of the angle concerned				Permissible deviations for basic size range		
	...10	>10 ...50	>50 ...120	>120 ...400	>400	>0.5 ...3	>3 ...6	...6
m	±1°	±0°30'	±0°20'	±0°10'	±0°5'	±0.2	±0.5	±1

DWN. BY: GYZ	CHK. BY	APP. BY
Date(yyyymmdd) : 2017-04-25	Date(yyyymmdd)	Date(yyyymmdd)
MATERIAL:		A4 ☑ SCALE 3:1 ☐ NOT SCALE
FINISH:		
General Tolerance ISO 2768-1 Class m (Unless specified)	TITLE	
ALL DIMENSIONS ARE IN MILLIMETRES	OD-6320M22	
SHENZHEN ODIN IMPORT AND EXPORT CO., LTD	DWG NO. OD-6320M22	SHEET 1 OF 1 A